# Data sheet

## 27081.6 PTKS 4/2 GR

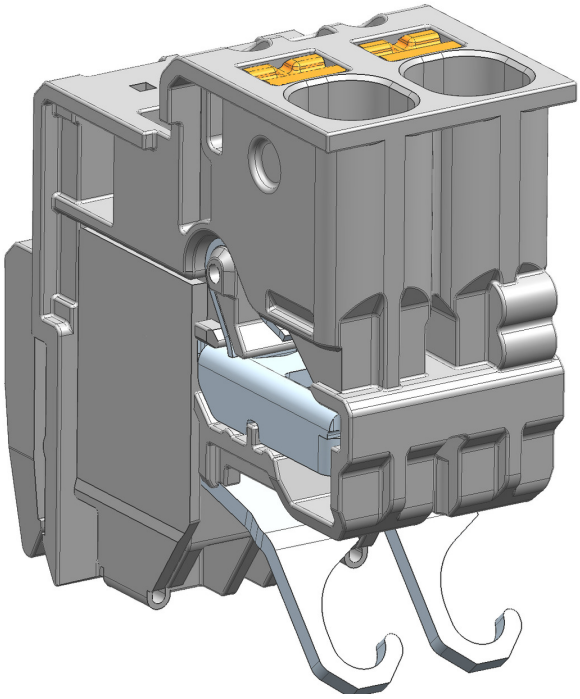

Transformer terminal, Push-in connection, Mounting type: Custom profile, Rated cross-section: 4 mm², Width: 15 mm, Colour: Grey

**RAL:** 7032

## Business data

| | |
|---|---|
| Article number | 27081.6 |
| Article name | PTKS 4/2 GR |
| GTIN (EAN) | 4044211242817 |
| Packaging unit | 25 |
| Quantity unit | PC |
| Weight per piece (not including packaging) | 9.57 g |
| Weight per piece (including packaging) | 9.84 g |
| Unit of weight | G |
| Customs number | 85369010 |
| Country of origin | BG |
| Prio-Article | 27081.6 |
| Product description | Transformer terminal |
| Colour | Grey |

# Data sheet

## 27081.6 PTKS 4/2 GR

## Technical data

| | |
|---|---|
| **Dimensions** | |
| Length | 32.5 mm |
| Width | 15 mm |
| Height | 35.4 mm |
| **Ratings** | |
| Rated voltage | 800 V |
| Rated current | 32 A |
| Rated cross-section | 4 mm² |
| Rated impulse voltage | 8 kV |
| Overvoltage category | III |
| Contamination degree | 3 |
| Maximum power dissipation for nominal condition | 2.04 W |
| **Connection data** | |
| Connection principle | Push-in connection |
| Connection position | Top |
| Connections | 2 |
| Wire cross-section single-core (rigid) / stranded, min. | 0.5 mm² |
| Wire cross-section single core (rigid)/stranded, max. | 6 mm² |
| Wire cross-section stranded, min. | 0.5 mm² |
| Wire cross-section stranded, max. | 4 mm² |
| Wire cross-section stranded with wire-end ferrules, min. | 0.5 mm² |
| Wire cross-section stranded with wire-end ferrules, max. | 4 mm² |
| Wire cross-section AWG, min. | 20 |
| Wire cross-section AWG, max. | 10 |
| Stripping length | 12 mm |
| **Materials** | |
| Insulation housing | Polyamide 6.6 |
| Flammability class UL 94 | V-0 |
| Working temperature, min. | -40 °C |
| Working temperature, max. | 120 °C |

## Technical data

### Further technical data

| | |
|---|---|
| Mounting type | Custom profile |
| Gauge plug acc. to EN 60 947-1 | A4 |
| Number of cross-connection channels | 1 |

### Environmental Product Compliance

| | |
|---|---|
| REACH Conform | yes |
| REACH Reference date | 2023-06-14 |
| REACH Candidate Substance Note | No |
| RoHS Conform | yes |

## Approvals

| cUL Recognized | |
|---|---|
| cUL approval | C22.2 No 158 |
| cUL Usegroup B: rated voltage | 600 V |
| cUL Usegroup B: rated current | 30 A |
| cUL Usegroup C: rated voltage | 600 V |
| cUL Usegroup C: rated current | 30 A |
| cUL wire cross-section single-core (rigid) AWG, min. | 20 |
| cUL wire cross-section single-core (rigid) AWG, max. | 10 |
| cUL wire cross-section stranded AWG, min. | 20 |
| cUL wire cross-section stranded AWG, max. | 10 |
| cUL wire material | Cu |
| cUL File Number | E95701 |
| cUL Recognized | 1 |

| KEMA KEUR approval | |
|---|---|
| KEMA KEUR approval | EN 60947-7-1:2009 |
| KEMA KEUR approval granted | yes |
| KEMA rated voltage | 800 V |
| KEMA rated current | 32 A |
| KEMA rated impulse voltage | 8 kV |
| KEMA wire cross-section single core (rigid), min. | 0.5 mm² |
| KEMA wire cross-section single-core (rigid), max. | 6 mm² |
| KEMA wire cross-section stranded, min. | 0.5 mm² |
| KEMA wire cross-section stranded, max. | 4 mm² |
| KEMA wire cross-section stranded with wire-end ferrules, min. | 0.5 mm² |
| KEMA wire cross-section stranded with wire-end ferrules, max. | 4 mm² |

## Approvals

| UL Recognized | |
|---|---|
| UL approval | UL 1059 |
| UL Usegroup B: rated voltage | 600 V |
| UL Usegroup B: rated current | 30 A |
| UL Usegroup C: rated voltage | 600 V |
| UL Usegroup C: rated current | 30 A |
| UL wire cross-section single-core (rigid) AWG, min. | 20 |
| UL wire cross-section single-core (rigid) AWG, max. | 10 |
| UL wire cross-section stranded AWG, min. | 20 |
| UL wire cross-section stranded AWG, max. | 10 |
| UL wire material | Cu |
| UL factory wiring | 1 |
| UL field wiring | 1 |
| UL File Number | E95701 |
| UL Recognized | 1 |

# Data sheet

## 27081.6 PTKS 4/2 GR

### Media

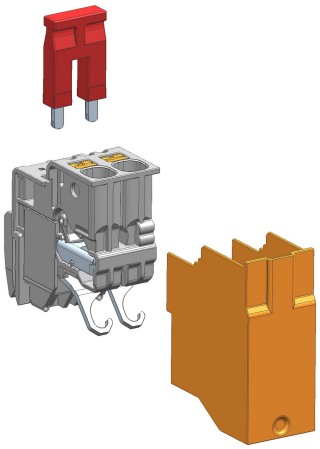

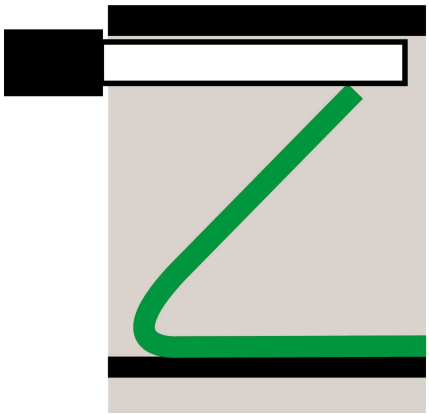

## Accessories

### Insulated cross-connector

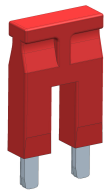

Insulated cross-connector, No. of poles: 2, Mounting type: Plug in, Pitch size: 7.5 mm, Colour: Red

| Article number | Article name | GTIN (EAN) | Packaging unit |
|---|---|---|---|
| 27084.9 | PQI 4/2/PTKS RD | 4044211245832 | 50 ST |

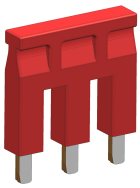

Insulated cross-connector, No. of poles: 3, Mounting type: Plug in, Pitch size: 7.5 mm, Colour: Red

| Article number | Article name | GTIN (EAN) | Packaging unit |
|---|---|---|---|
| 27085.9 | PQI 4/3/PTKS RD | 4044211245849 | 50 ST |

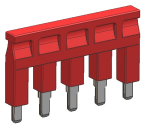

Insulated cross-connector, No. of poles: 5, Mounting type: Plug in, Pitch size: 7.5 mm, Colour: Red

| Article number | Article name | GTIN (EAN) | Packaging unit |
|---|---|---|---|
| 27086.9 | PQI 4/5/PTKS RD | 4044211245856 | 20 ST |

### Markers



Terminal marker / PC Card, Length: 7.5 mm, Width: 5 mm, Colour: White

| Article number | Article name | GTIN (EAN) | Packaging unit |
|---|---|---|---|
| 28357.7 | PC-SB 7,5X4/32 WH | 4044211216085 | 640 ST |

Terminal marker / Maxicard, Length: 5 mm, Width: 7.5 mm, Colour: White

| Article number | Article name | GTIN (EAN) | Packaging unit |
|---|---|---|---|
| 3326.7 | MC SB 7,5/160 WH | 4044211128838 | 800 |

Terminal marker / Maxicard, Length: 5 mm, Width: 7.5 mm, Colour: White

| Article number | Article name | GTIN (EAN) | Packaging unit |
|---|---|---|---|
| 9327.7 | MC SB 7,5/160 So WH | 4044211169220 | 800 |

# Data sheet

## 27081.6 PTKS 4/2 GR

### Markers

Terminal marker / Pocket Maxicard, Length: 5 mm, Width: 7.5 mm, Colour: White

| Article number | Article name | GTIN (EAN) | Packaging unit |
|---|---|---|---|
| 3327.7 | PMC SB 7,5/40 So WH | 4044211128845 | 400 ST |

### Protective hood

Cover hood for transformer terminal, 2-pole, Material: PA6.6, Colour: Orange

| Article number | Article name | GTIN (EAN) | Packaging unit |
|---|---|---|---|
| 27082.3 | PTKS-ADH 4/2 OG | 4044211242824 | 50 |